# Transport of machine

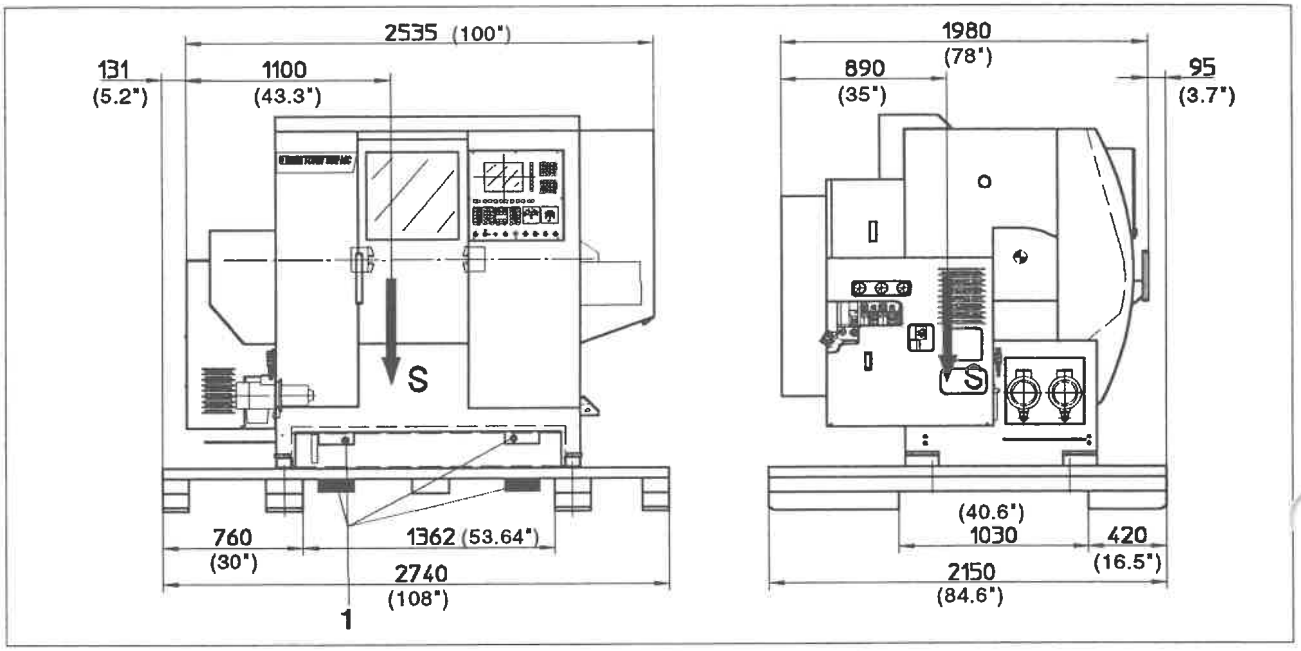


*Position of stack forks(1) and of center of gravity of the machine with the transport*

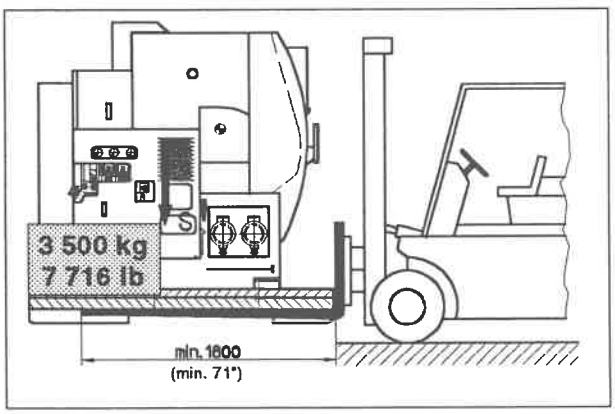


*transport with pallet*

## Transport with pallet

**Caution:**
The machine may only be transported on the pallet if the machine is fixed on the pallet by means of anchor bolts.

Lifting capacity..... min. 3 500 kg (7 716 lb)
Fork width ..... min. 1 000 mm (39.4")
Fork length..... min. 1 800 mm (71"

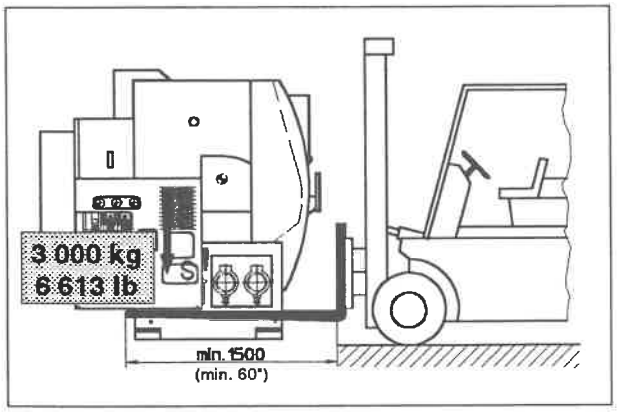


*transport without pallet*

## Transport without pallet

**Attention:**
- The lifting points and the fork widths have to be adhered to exactly so that there is no deformation at the machine base.
- The coolant tank must be removed during transport.
  Furthermore, the coolant pump(s) has (have) to be lifted upward (see "transport safety devices" in this chapter).

Lifting capacity..... min. 3 000 kg (6 613 lb)
Fork width ..... min. 1 000 mm (39.4")
Fork length..... min. 1 500 mm (60"