Technical Data of the Machine - metric

Working range		spindle ø32	spindle ø45
Max. turning diameter	[mm]	ø140	ø140
Max. turning diameter - theoretical	[mm]	ø220	ø220
Slide path X/X2 (option)	[mm]	160/140	160/140
Slide path Z/Z2	[mm]	510	510
Distance main spindle - counter spindle	[mm]	720	720
Max. size of workpiece with counter spindle	[mm]	ø140x480	ø140x480
Main spindle (spindle 1)		**spindle ø32**	**spindle ø45**
Spindle nose acc. to DIN 55026		A4	A5
Spindle ext. diam. in front bearing	[mm]	ø70	ø80
Clamping system optional - main spindle		**spindle ø32**	**spindle ø45**
Clamping cylinder without bore for chuck parts up to	[mm]	ø140	ø140
Clamping cylinder with bore max. hole	[mm]	ø32	ø45
Max. size of chuck	[mm]	ø130	ø160
Counter spindle (spindle 2)		**spindle ø32**	
Spindle nose acc. to DIN 55026		A4	
Spindle ext. diam. in front bearing	[mm]	ø70	
Travel path (Z)	[mm]	510	
Travel speed	[m/min]	24	
Holding force	[N]	3000	
Clamping system optional - counter spindle		**spindle ø32**	
Clamping cylinder without bore for chuck parts up to	[mm]	ø140	
Max. size of chuck	[mm]	ø130	
Feed drives		**spindle ø32**	**spindle ø45**
AC-motors in X and Z-axes			
Feeding force X/Z	[N]	4000/4000	4000/4000
Rapid speed X/Z	[m/min]	20/24	20/24
Acceleration speed from 0 to rapid traverse X/Z	[s]	0,2	0,2
Drive main spindle		**spindle ø32**	**spindle ø45**
AC-motor, output (80%DC)	[kW]	10	10
Speed range (infinitely variable)	[rpm]	0-8000	0-6300
Max. torque	[Nm]	53	78
Drive counter spindle		**spindle ø32**	
Electronic speed- and position-synchronisation with main spindel			
AC-motor, output (40%DC)	[kW]	10	
Speed range (infinitely variable)	[rpm]	0-7000	
Max. torque	[Nm]	45	
Spindle indexing		**spindle ø32**	**spindle ø45**
Programmable, hydraulically actuated disk brake			
Division	[°]	0,1	0,1

Subject to technical modifications!

C-axis (round axis)		spindle ø32	spindle ø45
Resolution of the round axis	[°]	0,001	0,001
Rapid traverse	[rpm]	100	100
Tool system		**spindle ø32**	**spindle ø45**
Revolver-type tool turret with direction logic, optional with driven tools			
Toolholding fixtures according to DIN 69 880		VDI 25	VDI 25
Number of tool stations, therof driven stations (otional)		12/12	12/12
Cycle time	[s]	0,1	0,1
Driven tool stations (optional)		**spindle ø32**	**spindle ø45**
Torque (constant with 40% DC)	[Nm]	12	12
Speed range	[rpm]	0-6000	0-6000
Max. output	[kW]	7,5	7,5
Hydraulic unit		**spindle ø32**	**spindle ø45**
Multi-circuit hydraulic unit for power chuck			
Filling level	[l]	23	23
Max. pressure for clamping device	[bar]	50	50
Pneumatic unit		**spindle ø32**	**spindle ø45**
Supply pressure	[bar]	6	6
Supply quantity	[l/min]	150	150
Lubrication system		**spindle ø32**	**spindle ø45**
Guideways, ball screws		autom. central oil lubrication	
Main spindle, counter spindle		grease lubrication	
Coolant device		**spindle ø32**	**spindle ø45**
Tank capacity	[l]	230	230
Delivery power with 3bar/1bar	[l/min]	10/50	10/50
Internal coolant feed		via tool turret	
Bar feed		**spindle ø32**	**spindle ø45**
Series preparation for the installation of the bar feed		✓	✓
Chip conveyor		**spindle ø32**	**spindle ø45**
10-pole plug for assembly chip conveyor included in basic machine		✓	✓
Electrical connection		**spindle ø32**	**spindle ø45**
Power supply	[V]	400 ~3/PE	400 ~3/PE
Max. voltage fluctuations	[%]	+5/-15	+5/-15
Frequency	[Hz]	50/60	50/60
Connected load	[kVA]	25	25
Max. preliminary fuse for machine	[A-slow]	50	50
Required short circuit power	[kVA]	1100	1100

Subject to technical modifications!

Dimensions / weight		**spindle ø32**	**spindle ø45**
Height of turning axis above floor	[mm]	1160	1160
Total height	[mm]	1940	1940
Installation surface WxD (without chip conveyor)	[mm]	2630x1995	2630x1995
Total weight of the machine	[kg]	3000	3200
Sound pressure level		**spindle ø32**	**spindle ø45**
mediated sound pressure level	[db(A)]	78	78
With the following conditions: Measuring mode: enveloping surface according to DIN 45 635 Measured point: 1m distance and 1.6m above ground Operating mode: maximum speed during idle running			

Subject to technical modifications!

Working area

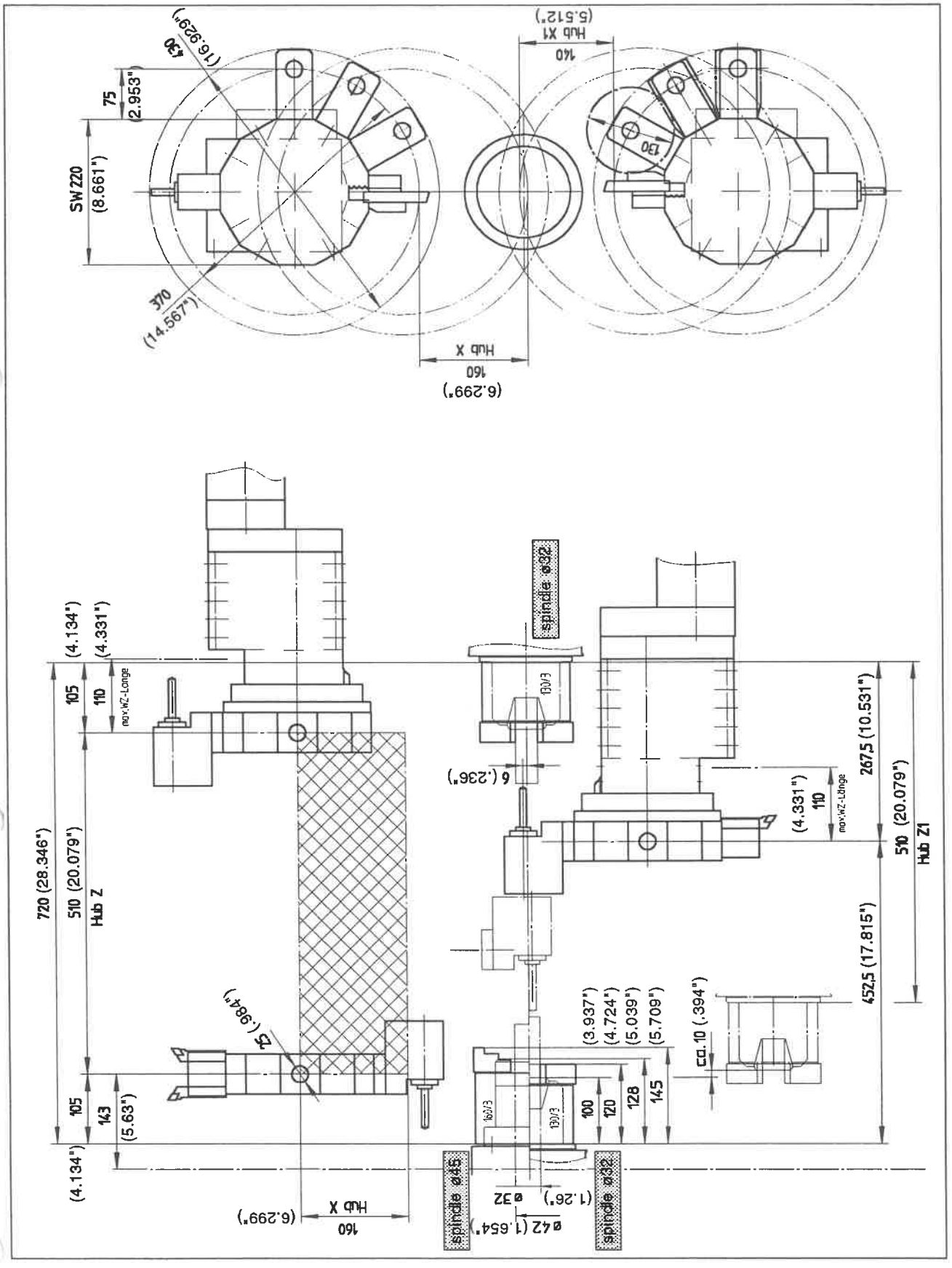

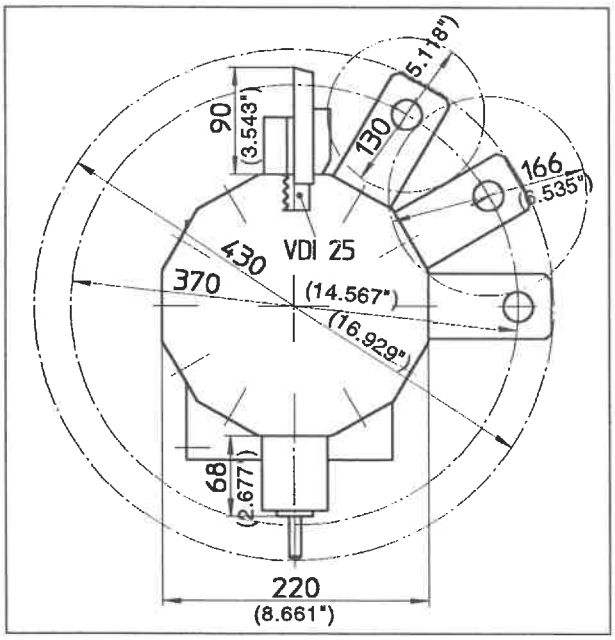

Working area of the tool turret disk

Tool turret

DThe EMCOTURN 332 is equipped with one or two 12-fold tool turret(s).
Depending on the type of the machine the tools can also be driven.

With machines with two tool turrets the same dates are valid according to the version.

Number of tool supports 12
Tool supports acc. to DIN69880 ..... VDI 25

driven tool stations (optional):
number of driven stations 12
torque (constant with 40% DC) 12 Nm (8.9 ft·lbf)
speed range ..... 0-6000 rpm

Working area

Note:
The opposite figure is valid for all types of tool turrets.
(Machines with and without driven tools.)

Tooling the tool turret

Danger:
Tooling the tool turret may only be carried out during standstill of the machine.

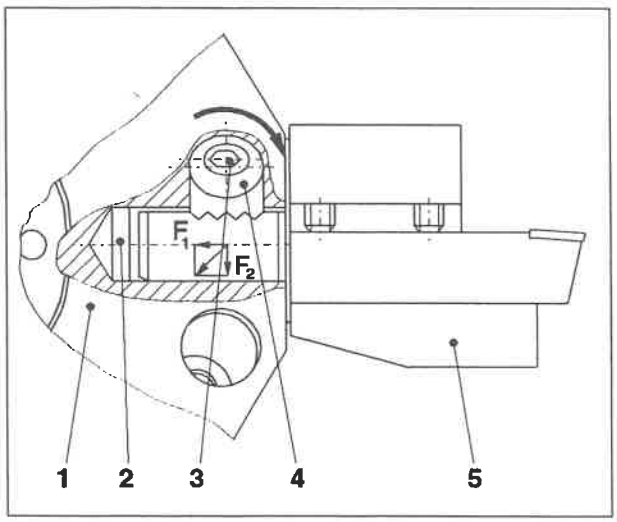

Mounting the VDI toolholder

- Insert tool turret VDI (5) into support (2) of the tool turret disc (1).
- Turn hexagon socket screw (3) in the direction of the arrow and tighten it.
  The toothing of the eccentric (4) engages in the toothing of the toolholder (5), pressing it against the tool turret disc (force F_1) and upward at the same time (force F_2).
- In clamped condition the toolholder lies on the clamping surface of the tool turret disc and is fixed in the centre axis of the VDI mounting bore.