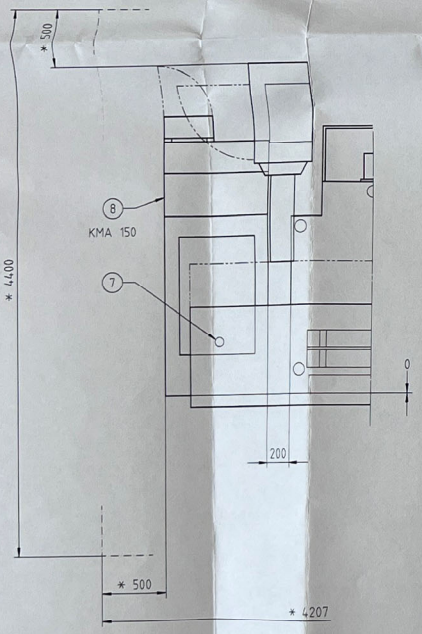

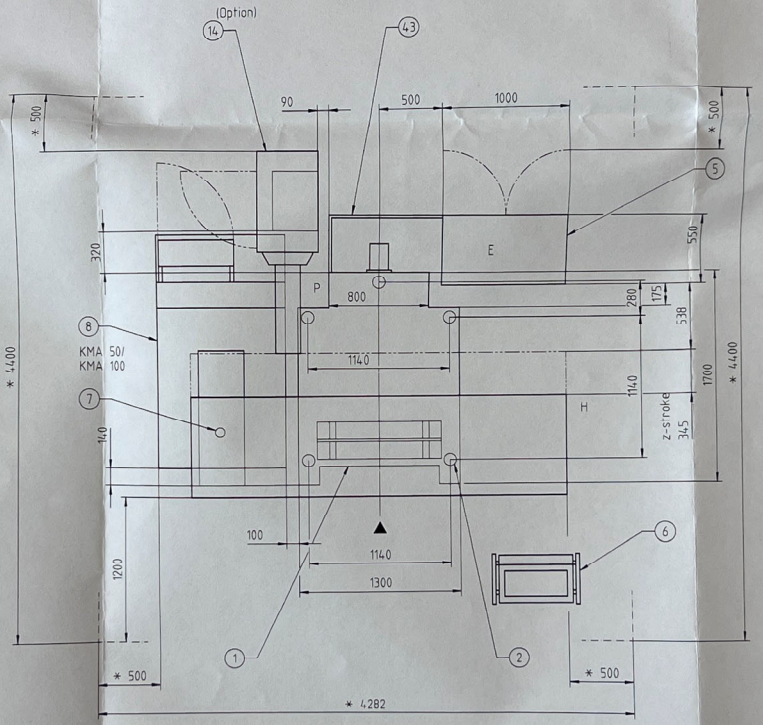

(1:50)

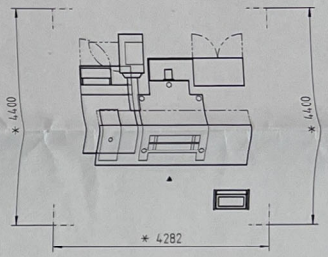

Orbit 36 + KMA 50 / KMA 100

(1:50)

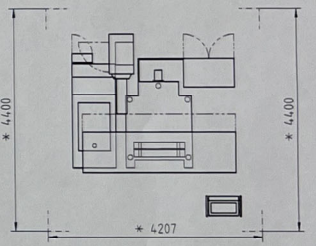

Orbit 36 + KMA 150

Kühlschmiermittel-Reinigungsanlage
coolant cleaning installation
installation de nettoyage

	KMA 50 / KMA 100	KMA 150
V=	400 l	650 l
Q=	50 l/min / 100 l/min	150 l/min

Gewicht weight poids	4000 kg
Transportmaße (BxTxH) transportation dimensions (WxDxH) dimensions de transport (LxPxH)	3100mm x 1900mm x 2300mm
Maschinenhöhe ab Boden machine height from floor hauteur de machine du plancher	2400 mm
Luftdruck air pressure pressure d'air	6-8 bar
Max. Luftmenge max. air consumption max. quantite d'air	10 m³/h
Hydraulik hydraulic hydraulique	3 bar

Auflagefläche (3x) mounting surface (3x) surface d'appui (3x)
Ø 100mm

El. Energie el. energy energie el.		
U	=	3 x 400 V
f	=	50 Hz
I	=	44 A
P	=	16 kVA

Erläuterungen: (90) 140 490
Explanation
Explication

Change No.	Change Description	Date	Person

Material		Type of Material	Assembly
Blank		Machine Type	BLH74 (K-P 25 ~ 48)
Weight	0.00	Subject Group	BLH003
Similar to		ItemID(Teamcenter)	100126074
Scale	1:20	General Tolerance	ISO 2768-mH
		General Welding Tolerance	ISO 13920-AE
		General Casting Tolerance	ISO 8062-CT9
		Surface Texture	ISO 1302
		Drawn by	07.06.11 T.Darowski
Sheet 1 / 1		Released by	10.05.12 T.Darowski

Körber Schleifring Machinery Co., Ltd
No. 1128, Yuehua Rd, Jiading Town
Lih-Jiangsu Jiading 20084
www.schleifring.cn

KÖRBER SCHLEIFRING - CHINA

Description / Name
ORBIT 36
foundation plan

Release	Material No.	Revision
03	100126074	00

NX A1

Refer to protection notice ISO 16016