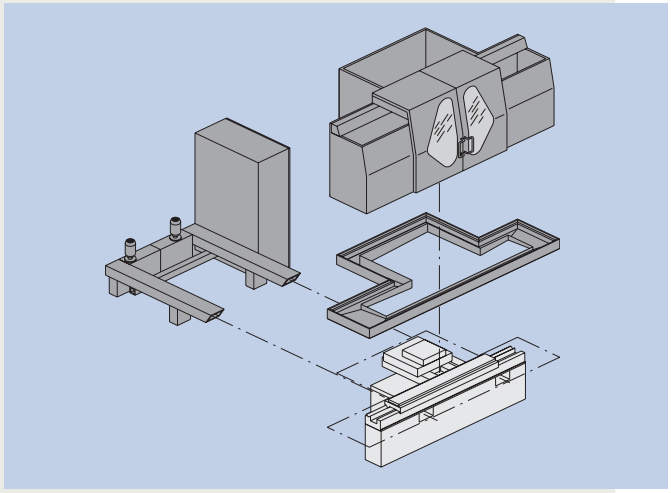

Separate infrastructure

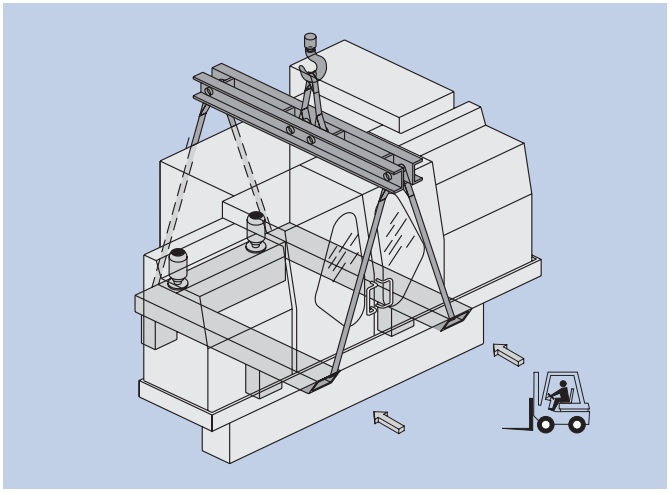

Easy transport

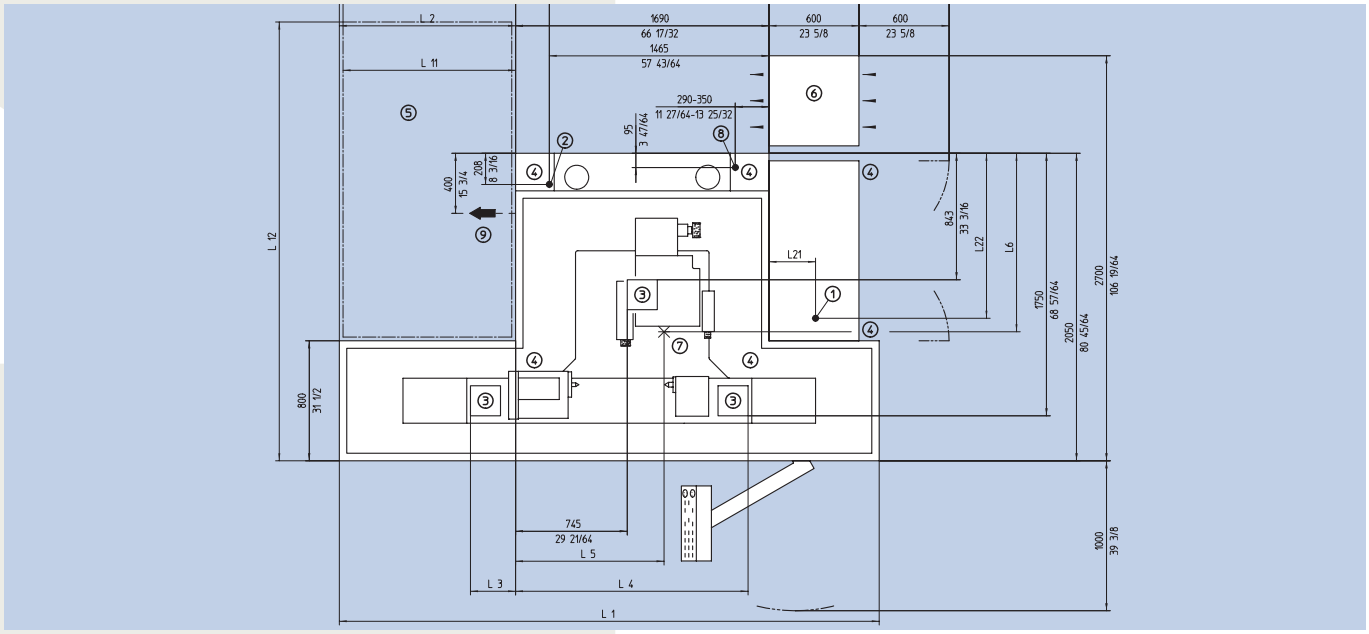

Space-assignment plan

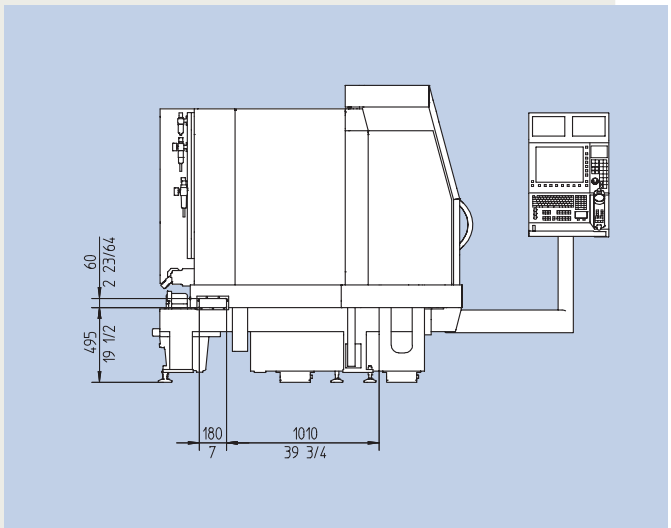

Coolant outlet

1 Power supply
2 Pneumatic supply
3 Vibration damping bases
4 Leveling elements
5 Coolant unit
6 Cooling unit
7 Coolant outlet

Type	L 1	L 2	L 3	L 4
600	3010	775	300	1550
1000	3600	1175	300	1550

(Measures L11 and L12 are depending on type of filtration unit)