9. Technical data

9.1. CRYSTA-Apex S500

Dimension

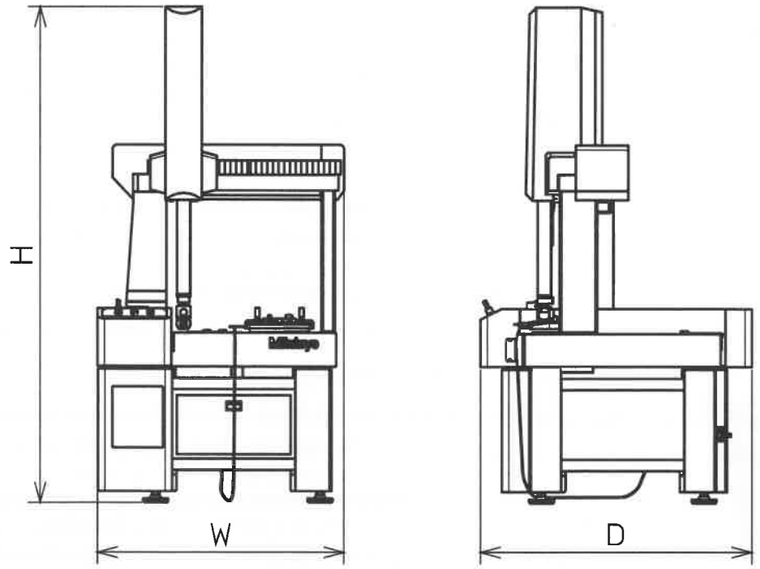

Fig. 9-1 Dimensions

Data	CRYSTA-Apex S 554	CRYSTA-Apex S 574	Unit
Width (W)	1082	1082	mm
Height (H)	2185	2185	mm
Depth (D)	1191	1501	mm

Space requirement

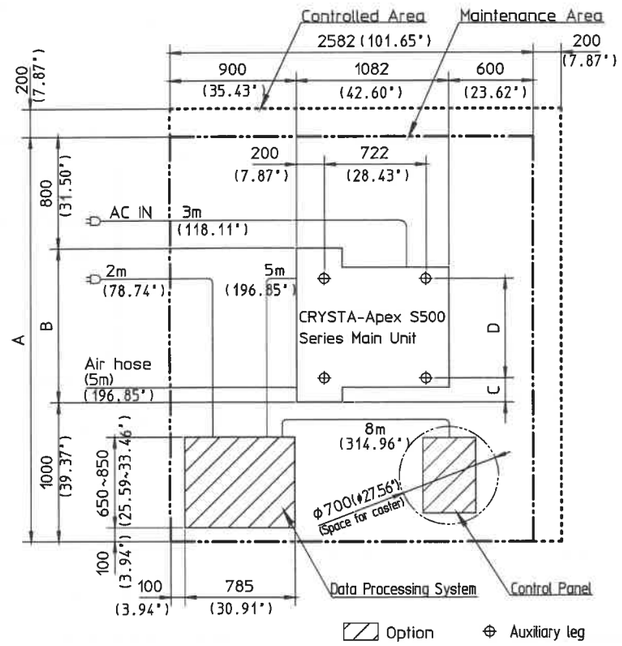

Fig. 9-2 Space requirement

Data	CRYSTA-Apex S 554	CRYSTA-Apex S 574	Unit
A	2991	2851	mm
B	1191	1051	mm
C	268	268	mm
D	713	1013	mm

Threaded bore in the granite plate

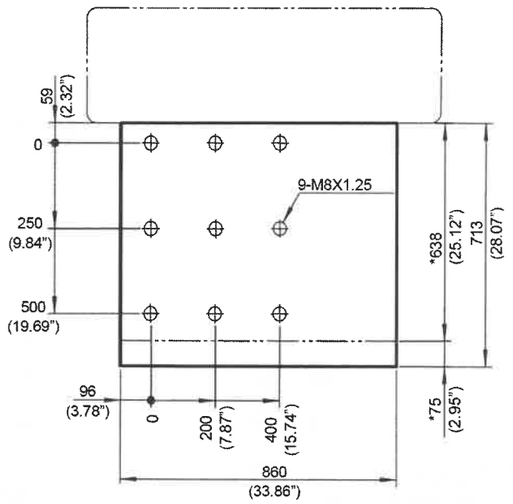

Fig. 9-3 Bores (S544)

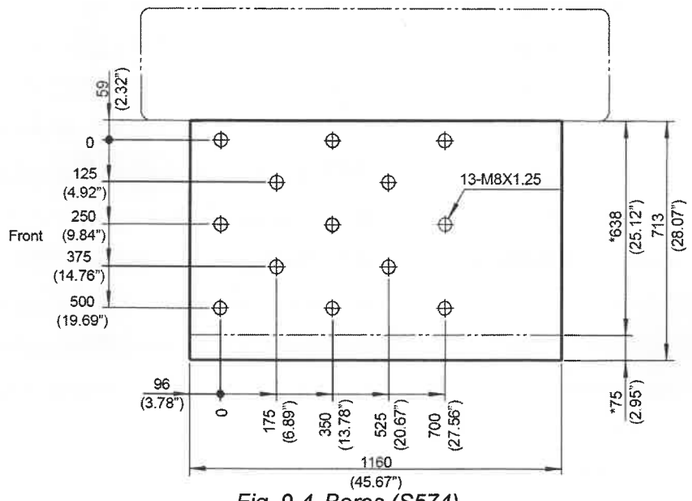

Fig. 9-4 Bores (S574)

Data	Value	Unit
Thread bors	M8x1.25	mm
Torque	980	N·cm

If fastening accessories made of plastic are used (special accessory), tighten the bolts only with the hands

CRYSTA-Apex S500

Measuring table

Data	Value	Unit
Size (fastening area) (S 544)	638 x 860	mm
Size (fastening area) (S 574)	638 x 1160	mm

Measuring range

Data	Value	Unit
X-axis	500	mm
Y-axis (S 544)	400	mm
Y-axis (S 574)	700	mm
Z-axis	400	mm

Weight

Data	Value	Unit
Weight (S 544) incl. Under frame/Controller	515	kg
Weight (S 574) incl. Under frame/ Controller	625	kg

Workpiece

Data	Value	Unit
Maximum workpiece width	500	mm
Maximum workpiece height	545	mm
Maximum workpiece depth (S 544)	400	mm
Maximum workpiece depth (S 574)	700	mm
Maximum workpiece weight	180	kg

Environment

Data	Value	Unit
Indoor use	-	-
Altitude	1000≦	m
Overvoltage category	II	-
Pollution degree	2	-

Electrical connection values

Data	Value	Unit
Voltage	100-120/220/240 Single phase, 2-wire. One wire is grounded.	V(AC)
Frequency	50/60	Hz
Total power	0.6	kW
Grounding cable, grounding class	D	-
Maximum grounding resistance	100	Ω

Pneumatic connection values

Data	Value	Unit
Air source	0.5≦≦0.9	MPa
	120≦	l/min
Air pressure	0.4	MPa
Consumption	50	l/min

Noise

Data	Value	Unit
Maximum pneumatic noise emission	70≦	dB (A)

Operation speed

Data		Value	Unit
Maximum speed		519	mm/s
CNC mode, each axis	Mode select switch - Manual	8 to 138 [1)]	mm/s
	Mode select switch - Auto	8 to 300 [1)]	
Joystick mode		0 to 80	mm/s
Acceleration each axis		1333	mm/s^2
Acceleration within range		2309	mm/s^2

Measuring speed

Data	Value	Unit
CNC mode	1 to 8 [1)]	mm/s
Joystick mode	0 to 3	mm/s

Note 1) in default setting

Installation requirment

Temperature accuracy

The ambient temperature is indicated in the table, within the accuracy that is guaranteed for the coordinate measuring machine

Standard model	
Range	18 to 22 °C
Temperature drop	2.0 °C /h
	2.0 °C /24 h
Temperature difference	vertical: 1.0 °C /m
	horizontal: 1.0 °C /m

With thermal error compensation	
Range	16 °C to 26 °C
Temperature drop	2.0 °C /h
	5.0 °C /24 h
Temperature difference	vertical: 1.0 °C /m
	horizontal: 1.0 °C /m

Environmental conditions

Operation	
Temperature range	10 °C to 30 °C
Relative air moisture (no condensation)	55 % to 65 %
Storage	
Temperature range	5 °C to 40 °C, maximum 2.0 °C / h temperature drop
Relative air moisture (no condensation)	< 55 %
Transport	
Temperature range	5 °C to 40 °C, maximum 2.0 °C / h temperature drop
Relative air moisture (no condensation)	< 80 %

Vibration

Data	Value	Unit
Vibration	10Hz or less Amplitude of 2 um p-p or less 10Hz to 50Hz Acceleration of 0.004 m/s^2 or less	-