5 Specifications

5.1 Specifications of CRYSTA-Apex S500 Series Main Unit

Specifications of CRYSTA-Apex S500 Series Main unit

Item		CRYSTA-Apex S544	CRYSTA-Apex S574
Measuring range	X	500mm (19.69")	
	Y	400mm (15.75")	700mm (27.56")
	Z	400mm (15.75")	
Guide method		Air bearings of each axis	
Drive speed	CNC mode (Operation type selection switch:AUTO)	Moving speed of each axis:8 to 300 mm/s (.31 to 11.81"/s) (maximum composite speed: 519 mm/s (20.43"/s))	
		Measuring speed: 1 to 8 mm/s (.04 to .31"/s)	
	CNC mode (Operation type selection switch:MANUAL)	Moving speed of each axis:8 to 138 mm/s (.31 to 5.43"/s) (maximum composite speed: 239 mm/s (9.41/s))	
		Measuring speed: 1 to 8 mm/s (.04 to .31"/s)	
	Joystick mode	Moving speed: 0 to 80mm/s (0 to 3.15"/s)	
		Measuring speed: 0 to 3 mm/s (0 to .12"/s)	
Driving acceleration		1,333mm/s^2 (52.48"/ s^2) for each axis (maximum composite acceleration: 2,309 mm/s^2 (90.90"/ s^2))	
Measuring system		Linear encoder	
Resolution		0.0001 mm (.000004")	
Measuring table	Material	Granite	
	Size	638×860mm (25.12" ×33.86")	638×1160 mm (25.12" ×29.46")
	Workpiece clamping	M8×1.25	
Workpiece	Maximum height	545 mm (21.46")	
	Maximum mass	180 kg (397 lbs)	
Dimensions (Main unit)	Height	2185 mm (86.02")	
	Width	1082 mm (42.60")	
	Depth	1191mm(46.89")	1548mm(60.9")
Machine mass (Include including stand and controller)		515kg / 1137lbs	625 kg / 1379 lbs
Power supply condition	Power supply (Installation)	Single phase 100to120/220to240v ±10% 50/60 Hz, Single wire-grounded (D type grounding: Grounding resistance 100Ω or less)	
	Power supply capacity	0.6kW (including for an optional probe)	
	Input power capacity	0.6kW	
Air supply conditions	Pressure requirement	0.4 MPa (4kgf/cm2)	
	Air consumption	50 L/min (at normal condition) (Air source: 100L/min or more)	
Installation environment conditions		Temperature conditions and floor vibrations should comply with "Section 1.2.1 Environment Conditions".	

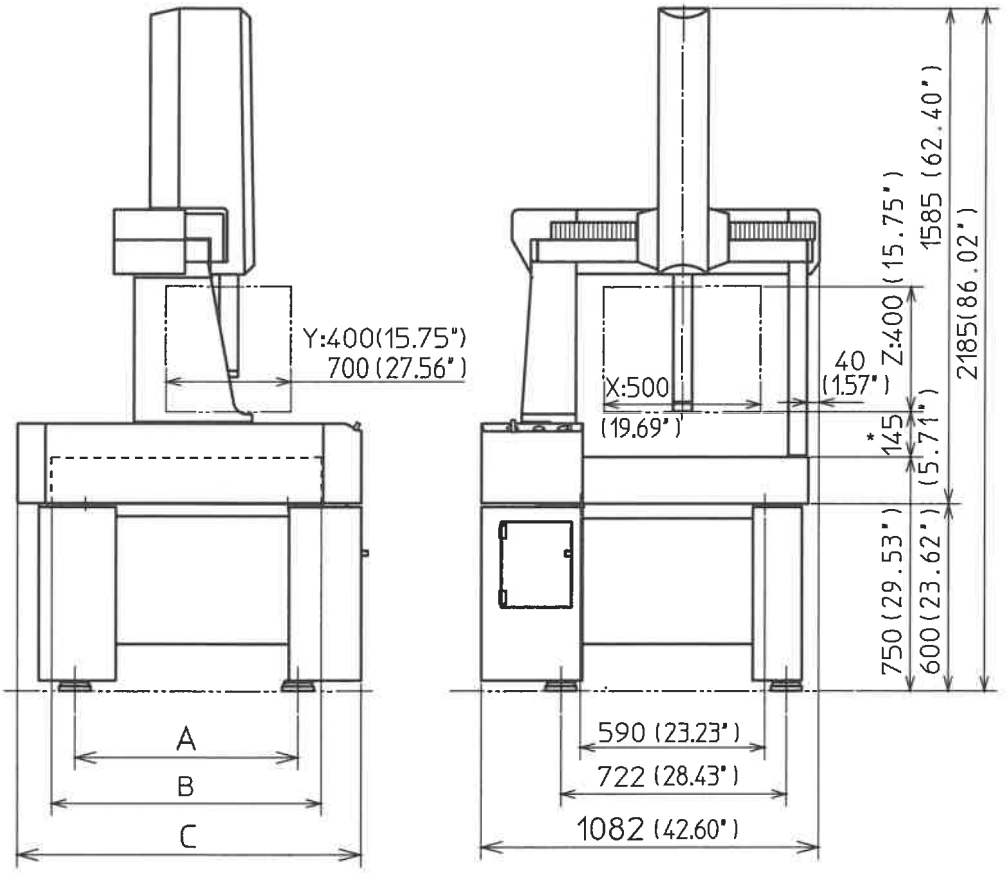

*1: Supporting point pitch for measuring table
*2: Supporting point pitch
*3: Dimension of the measuring table

CRYSTA-Apex S500 Series Main Unit External Dimension

Unit : mm (inch)

	CRYSTA-Apex S544	CRYSTA-Apex S574
A	713 (28.07")	1013 (39.88")
B	860 (33.86")	1160 (45.67")
C	1191(46.89")	1548(60.94")

*** dimension is 135 mm(5.31") in the multi-wire model.**

5.2 Accuracy of CRYSTA-Apex S500 Series Main Unit

Accuracy of CRYSTA-Apex S500 series main unit for temperatures conditions

1. Temperature environment in which accuracy is guaranteed.

For standard machine	Temperature range in which accuracy is guaranteed (I)	Range	18 °C ～ 22 °C
		Variance	2.0 °C / 1h
			2.0 °C / 24h
		Gradient	Vertical : 1.0 °C / m
			Horizontal : 1.0 °C / m
For machine with optional temperature compensation capability	Temperature range in which accuracy is guaranteed (II)	Range	16 °C～26 °C
		Variance	2.0 °C / 1h
			5.0 °C / 24h
		Gradient	Vertical : 1.0 °C / m
			Horizontal : 1.0 °C / m

2. Accuracy of CRYSTA-Apex S500 Series Main Unit

◆Maximum permissible error of length measurement◆

Accuracy Specifications 1

In case of temperature range in which accuracy is guaranteed (I) [Unit: µm]

Probe model	TP20	TP200	MPP310 / SP25M / SP600Q
Length measurement error ($E_{0,MPE}$)	2.2+3L/1000	1.9+3L/1000	1.7+3L/1000
Length measurement error ($E_{150,MPE}$)	2.7+3L/1000	2.4+3L/1000	1.7+3L/1000
Repeatability range $R_{0,MPE}$ (see ISO 10360-2:2009)	1.8	1.5	1.3

・L: Measuring length (mm) ・Be based on ISO 10360-2:2009,JIS B 7440-2:2013.

Accuracy Specifications 2

In case of temperature range in which accuracy is guaranteed (II) [Unit: µm]

Probe model	TP20	TP200	MPP310 / SP25M / SP600Q
Length measurement error ($E_{0,MPE}$)	2.2+4L/1000	1.9+4L/1000	1.7+4L/1000
Length measurement error ($E_{150,MPE}$)	2.7+4L/1000	2.4+4L/1000	1.7+4L/1000
Repeatability range $R_{0,MPE}$ (see ISO 10360-2:2009)	1.8	1.5	1.3

・L: Measuring length (mm) ・Be based on ISO 10360-2:2009,JIS B 7440-2:2013.

◆Maximum permissible error of other measurement◆ [Unit: µm]

Probe model	MPP310	SP25M / SP600Q
Scanning error (MPE_{THP})	1.8(90s)	2.3(50s)

・Be based on ISO 10360-4:2000,JIS B 7440-4:2003.

[Unit: µm]

Probe model	TP20	TP200	MPP310	SP25M / SP600Q
Single stylus form error ($P_{FTU,MPE}$)	2.2	1.9	1.5	1.7

・Be based on ISO 10360-5:2010,JIS B 7440-5:2013.

- In all accuracy specification, Accuracy determined with the following Stylus

  Ø4 × 10 mm / Ø.16 × .39" for TP20, Ø4 × 10 mm / Ø.16 × .39" for TP200

  Ø4 × 18 mm / Ø.16 × .70" for MPP310, Ø4 × 50 mm / Ø.16 × 1.97 " for SP25M / SP600Q

Specifications of Controller "UC400"

(1) Operation modes

- CNC mode
- Joystick mode

(2) Drive speed

- In CNC mode

Moving speed	:	8 to 300 mm/s (.31 to 11.81″/s) for each axis and 519 mm/s (20.43″/s) as maximum composite speed
Measuring speed	:	1 to 8 mm/s (.04 to .31″/s)

Each speed can be set by the host computer.

- In Joystick mode

Drive speed	:	0 to 80 mm/s (0 to 3.15″/s)
Measuring speed (MEAS)	:	0 to 3 mm/s (0 to .12″/s)

(3) Feedback method

• Speed feedback	:	By pulse generator
• Position feedback	:	By linear encoder (closed loop method)

(4) Power supply

• AC IN	:	100 - 120, 220 - 240 VAC ±10% (Automatic selectable), 50/60 Hz
• Power consumption	:	Max. 530 W
• Maximum duration of momentary power failure	:	40 ms (AC100 V 50 Hz: Power supply)

(5) Safety

• Insulation resistance	:	100 MΩ or more (between AC and FG)
• Dielectric strength	:	1,000 VAC, 1 minute (between AC and FG)
• Leakage current	:	1.0 mA (AC 100 V)

(6) Joystick box

- Dimensions and mass of joystick box HANDY(Selectable option)

External dimensions : See the below

Mass : 0.36 kg (.79 lbs)

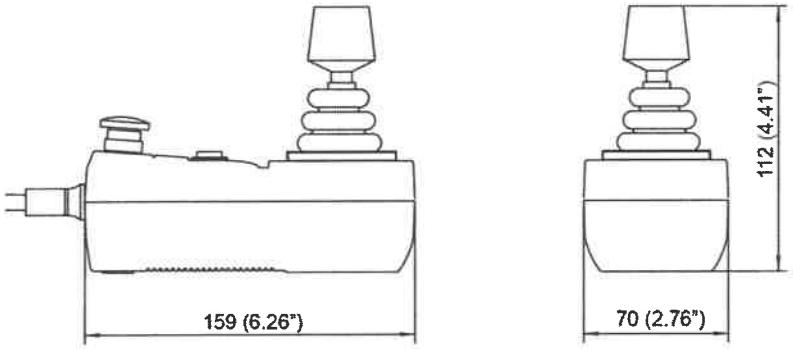

External Dimensions of Joystick box HANDY

- Dimensions and mass of joystick box-M(Selectable option)

External dimensions : See the below

Mass : 0.8 kg (1.76 lbs)

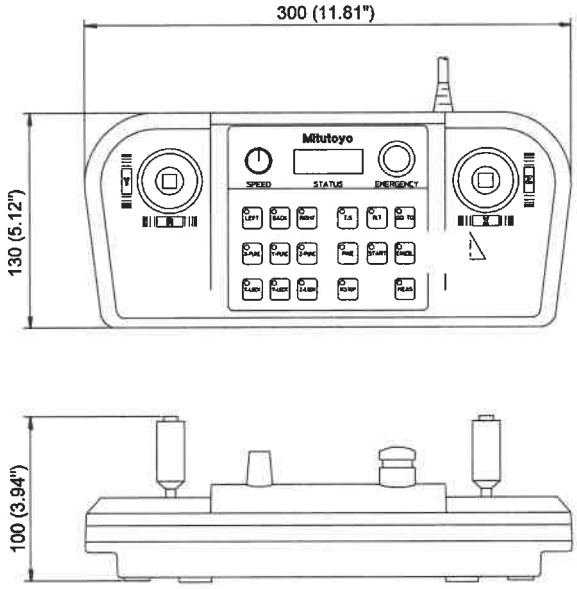

External Dimensions of Joystick box-M

The dimensions of a Joystick Box-V(option)

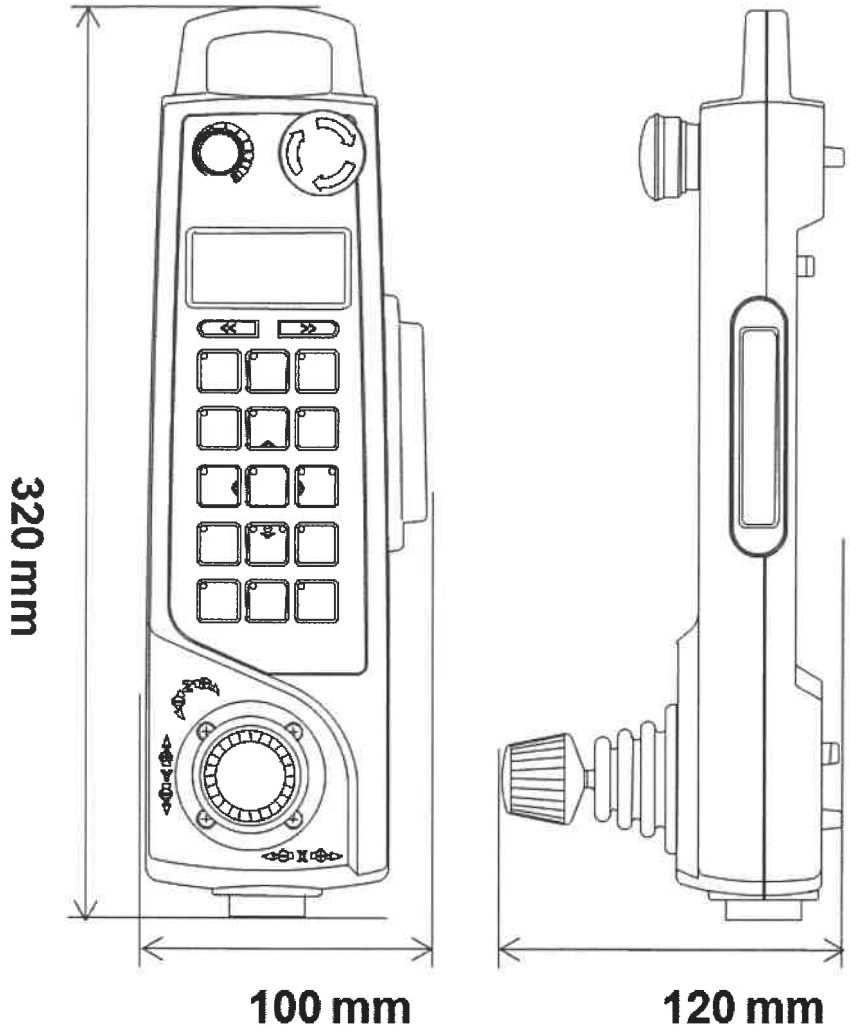

External Dimensions of Joystick Box-V