7 Specifications

This chapter lists the specifications of the measuring main unit and accessories.

7.1 Specifications of the Measuring Main Unit

Model No. FTA-□□D3000-D / □□D4000-D FTA-□□S3000-D FTA-□□C3000-D / □□C4000-D		S4	H4	W4	L4	S8	H8	W8	L8
X-axis measuring range		100 mm				200 mm			
Scale unit	X-axis	STVC-10Z							
	Z2-axis (Column)	ABS Linear Encoder							
Resolution	X-axis	0.05 µm							
	Z2-axis (Column)	1 µm							
X-axis inclination angle		±45°							
Z2-axis (Column) travel range		300 mm	500 mm		700 mm	300 mm	500 mm		700 mm
Drive speed	X-axis	FORMTRACEPAK operation: 0 mm/s-80 mm/s Joystick operation: 0 mm/s-40 mm/s							
	Z2-axis (Column)	FORMTRACEPAK operation: 0 mm/s-30 mm/s Joystick operation: 0 mm/s-30 mm/s							
Measuring speed*		0.02 mm/s, 0.05 mm/s, 0.1 mm/s, 0.2 mm/s, 0.5 mm/s, 1.0 mm/s, 2.0 mm/s, 5.0 mm/s, 10 mm/s, 20 mm/s, 30 mm/s							
Detector replacement		Turning OFF the power of FORMTRACER Avant and rebooting of the software are not required because of the Hot Swap function (automatic detector type recognition and automatic contour measuring detector initialization).							
Size of base (W×D)		600×450 mm		1000×450 mm		600×450 mm		1000×450 mm	
Base material		Gabbro pegmatite							
Outer dimensions (WxDxH, mm)	Main unit	970×574 ×966 mm	970×574 ×1166 mm	1369×574 ×1176 mm	1369×574× 1430 mm	980×574× 966 mm	980×574× 1166 mm	1379×574× 1176 mm	1379×574× 1430 mm
	Controller	221×346×472 mm							
	Remote box	248×102×62 mm							
Mass (Weight)	Main unit	140 kg	150 kg	220 kg	270 kg	140 kg	150 kg	220 kg	270 kg
	Controller	14 kg							
	Remote box	0.9 kg							
Accuracy guaranteed temperature range		20 °C ± 1 °C							
Accuracy guaranteed temperature gradient		2.0 °C/8 h							
Operating temperature range		5 °C-40 °C (The temperature variation between at the time of calibration and measurement must be within ±1 °C or less.)							
Operation humidity range		20 %-80 % RH (No moisture condensation allowed)							
Storage temperature range		-10 °C-50 °C							
Storage humidity range		5 %-90 % RH (No moisture condensation allowed)							
Communication interface		USB							
Power supply specifications		100 V-120 V, 200 V-240 V ±10%, AC50/60 Hz							
Airborne noise		A-weighting sound pressure level 70 dB (A) or less							
Power consumption		400 W							
CE marking / UKCA marking		EMC Directive/Electromagnetic Compatibility Regulations: EN 61326-1 Immunity test requirement: Clause 6.2 Table 2 Emission limit: Class A Machinery Directive/Supply of Machinery (Safety) Regulations: EN ISO 12100, EN 60204 RoHS Directive/The Restriction of the Use of Certain Hazardous Substances in Electrical and Electronic Equipment Regulations: EN IEC 63000							

* The measuring speed of 5 mm/s or slower is recommended.
(Measuring at a high speed may chip off the stylus tracer or cause deterioration in the measuring accuracy depending on the surface condition.)

● When using the surface roughness measurement detector (S-3000)

Model No. FTA-□□S3000-D	S4	H4	W4	L4	S8	H8	W8	L8
Z1-axis (Detection part) measuring range	800 µm / 80 µm / 8 µm							
Z1-axis (Detection part) scale unit	Differential inductance							
Z1-axis (Detection part) resolution	0.01 µm (800 µm), 0.001 µm (80 µm), 0.0001 µm (8 µm)							
Straightness accuracy (With the X-axis in a horizontal position) evaluation parameter: Pt	(0.05+0.001L) µm L=Driving length (mm)				(0.1+0.002L) µm L=Driving length (mm)			
Stylus up-down movement	Circular arc movement							
Measuring direction	Pulling direction							
Measuring surface direction	Downward direction							
Measuring force	0.75 mN							
Tip of stylus	60°, R2 µm, Diamond							

● When using the contour measuring detector (C-3200, C-4500)

Model No. FTA-□□D3000-D / □□D4000-D FTA-□□S3000-D FTA-□□C3000-D / □□C4000-D		S4	H4	W4	L4	S8	H8	W8	L8
Z1-axis (Detection part) measuring range		60 mm (±30 mm from the horizontal position)							
Z1-axis (Detection part) scale unit		RT detector							
Z1-axis (Detection part) resolution		0.04µm (C-3200 detector), 0.02µm (C-4500 detector)							
Straightness accuracy (With the X-axis in a horizontal position)		0.8 µm / 100 mm				2 µm / 200 mm			
Specified accuracy (20 °C)	X-axis	±(0.8+0.01L) µm L=Driving length (mm) Wide range: 1.8 µm / 100 mm Narrow range: 1.05 µm / 25 mm				±(0.8+0.015L) µm L=Driving length (mm) Wide range: 3.8 µm / 200 mm Narrow range: 1.2 µm / 25 mm			
	Z1-axis (Detection part)	C-3200 Detector : ±(1.2+ | 2H | / 100) µm C-4500 Detector : ±(0.8+ | 2H | / 100) µm H=Measuring height from the horizontal position (mm)							
Stylus up-down movement		Circular arc movement							
Measuring direction		Both pulling and pushing directions							
Measuring surface direction		C-3200 Detector: Both upward and downward directions C-4500 Detector: Both upward and downward directions (Upper and lower surfaces continuous measurement)							
Measuring force		C-3200 Detector: 30 mN C-4500 Detector: 10 mN, 20 mN, 30 mN, 40 mN, 50 mN (Switchable with the software)							
Tracing angle (When using the standard accessory stylus)		One-sided cut stylus SPH-71: Ascending 77°, Descending 83° Double-sided conical stylus SPHW-56: Ascending 74°, Descending 72° (Dependent on the surface condition)							
Tip of stylus		One-sided cut stylus SPH-71: Tip angle 12° Tip radius 25 µm, Carbide Double-sided conical stylus SPHW-56: Tip angle 30° Tip radius 25 µm, Carbide							
Stroke restriction function		Specified range: -29 mm-+29 mm Positioning accuracy range: ± 1 mm							
Stylus dropping speed controlling function (C4500 only)		Suppressing* the stylus dropping speed in case of an accidental drop from the measuring surface *When the measuring speed is set to 5 mm/s, the stylus may not trace a steep ascending surface. Set the measuring speed to 2 mm/s or less to avoid this trouble.							

7.2 External Dimensions

7.2.1 Measuring Main Unit

■ FTA-S4□3000-D, FTA-S4□4000-D, FTA-H4□3000-D, FTA-H4□4000-D

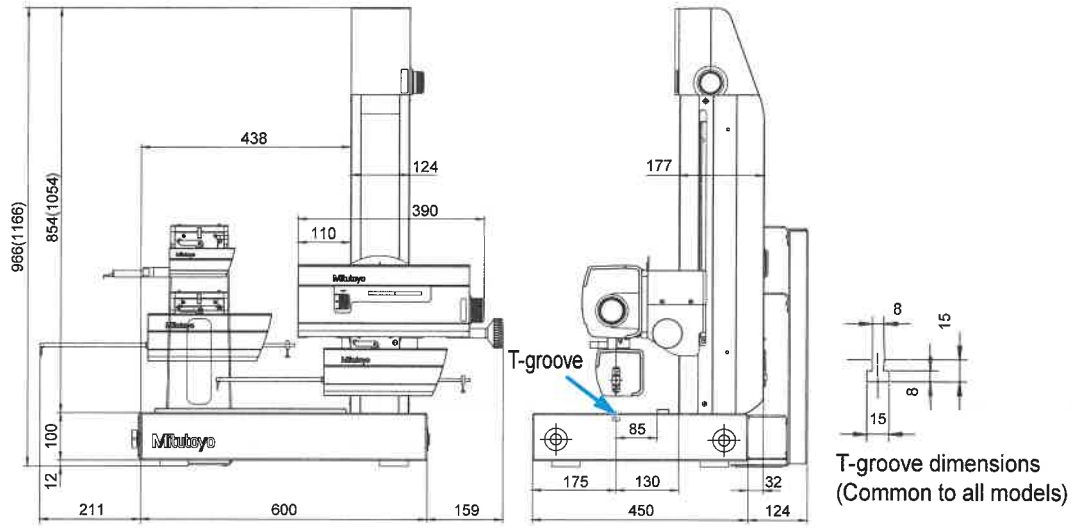

T-groove dimensions
(Common to all models)

The figures in ( ) denote the dimensions of type H4.

● Measuring range:
When using the surface roughness measuring detector

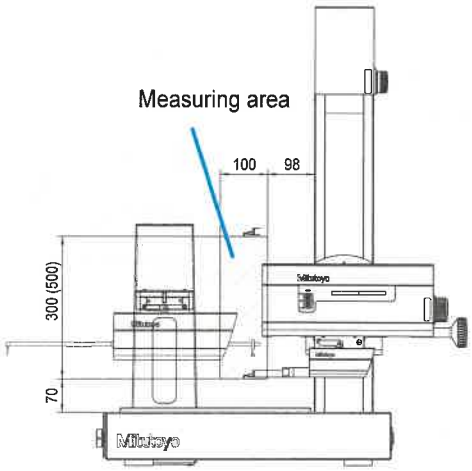

● Measuring range:
When using the contour measuring detector

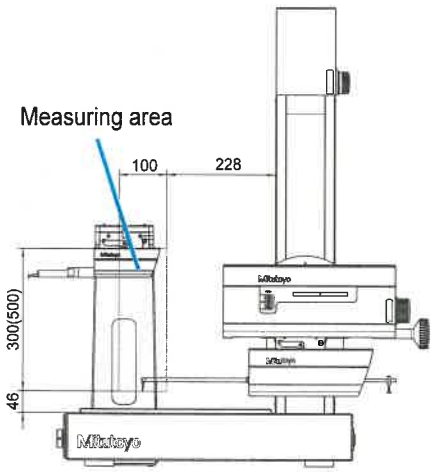

■ FTA-W4□3000-D, FTA-W4□4000-D, FTA-L4□3000-D, FTA-L4□4000-D

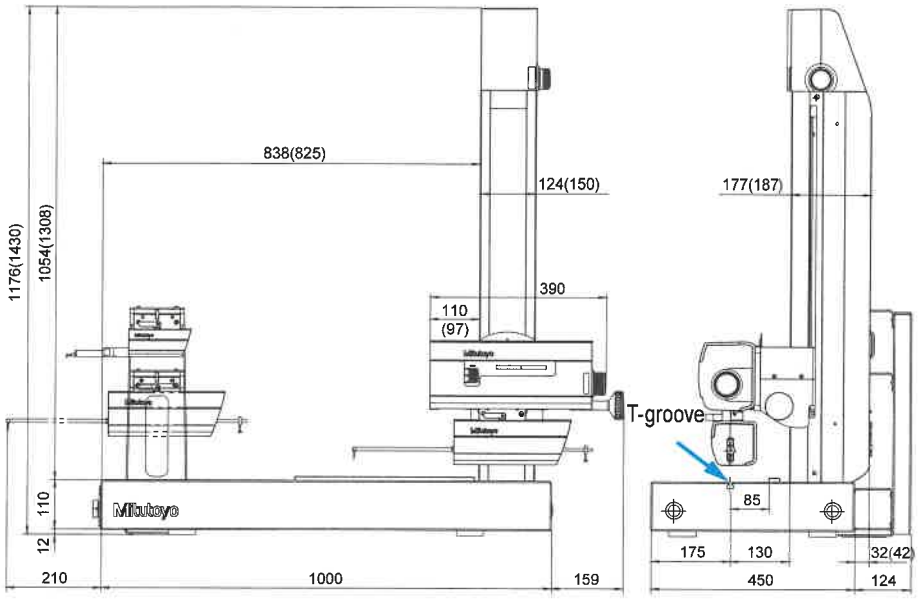

The figures in ( ) denote the dimensions of type L4.

- Measuring range:
  When using the surface roughness measuring detector

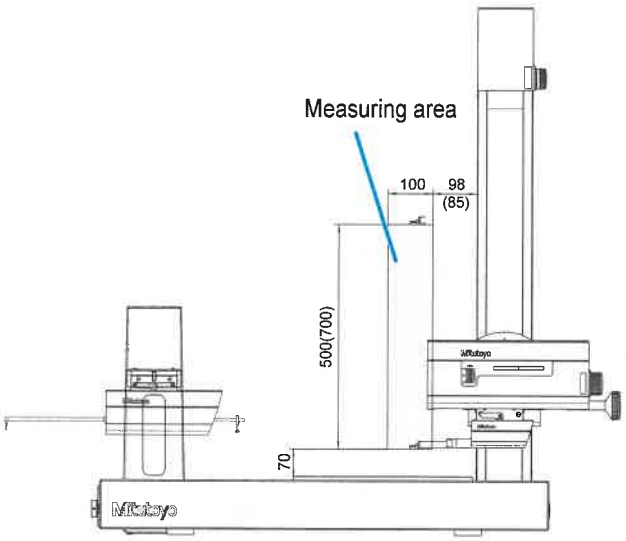

- Measuring range:
  When using the contour measuring detector

